Area of a Quadrilateral

Find the area of each quadrilateral.

1)

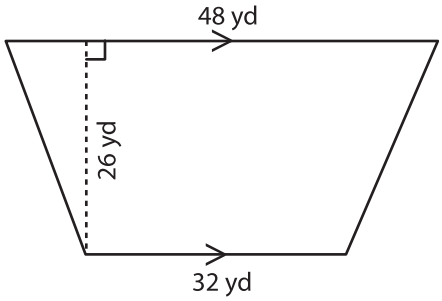

Area = _____

2)

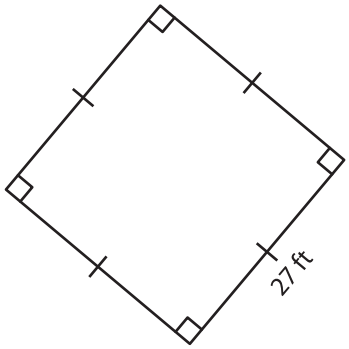

Area = _____

3)

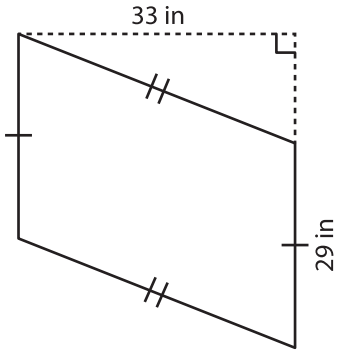

Area = _____

4)

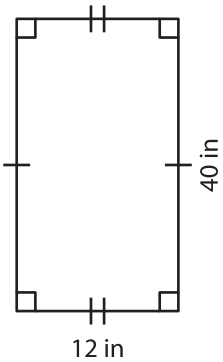

Area = _____

5)

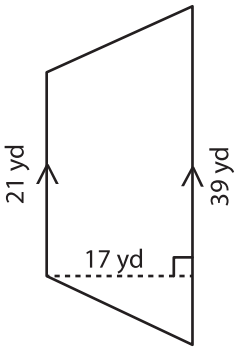

Area = _____

6)

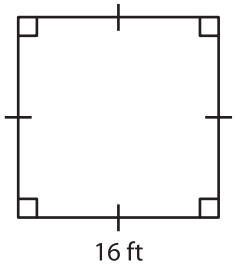

Area = _____

7)

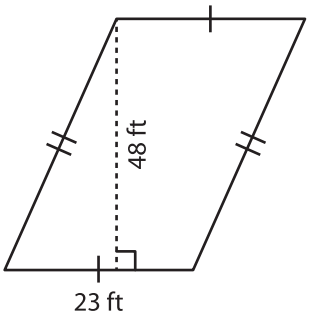

Area = _____

8)

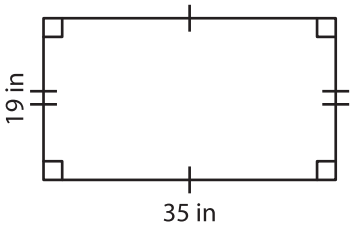

Area = _____

9)

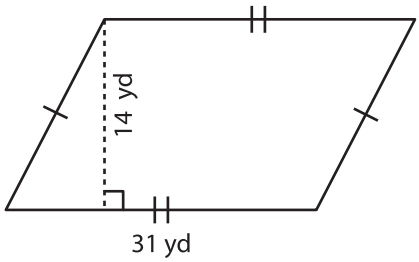

Area = _____